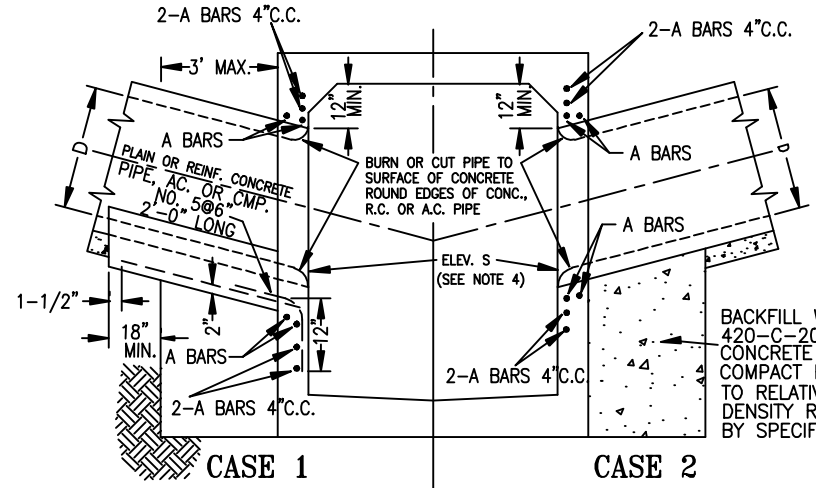

SECTION A-A

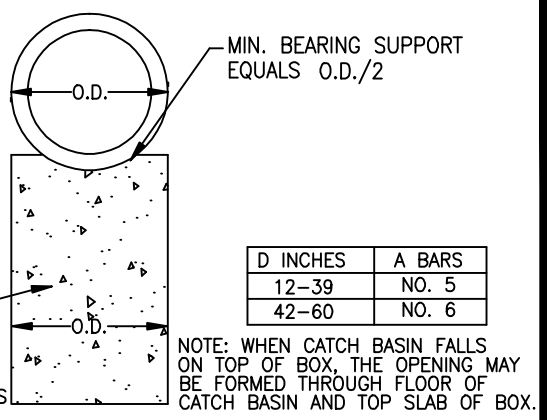

D INCHES	A BARS
12-39	NO. 5
42-60	NO. 6

NOTE: WHEN CATCH BASIN FALLS ON TOP OF BOX, THE OPENING MAY BE FORMED THROUGH FLOOR OF CATCH BASIN AND TOP SLAB OF BOX.

SECTION B-B

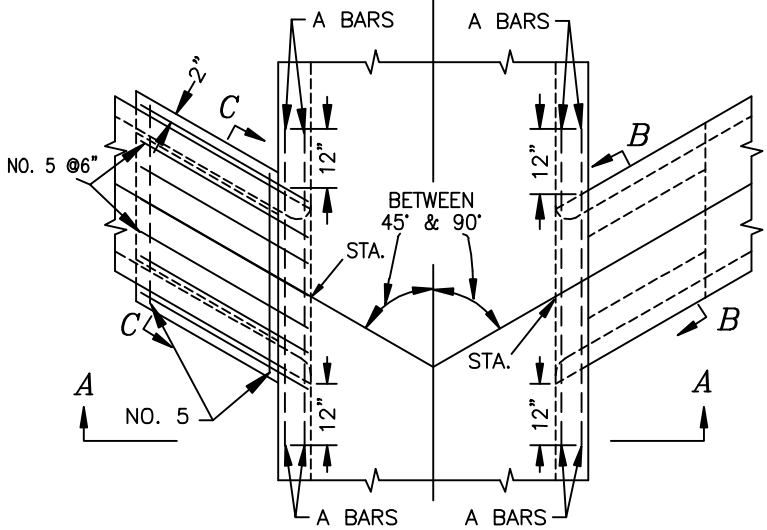

CASE 1-BEAM SUPPORT
D = 30" OR LESS

CASE 2-COLUMN SUPPORT
D = 60" OR LESS FOR CMP
D = 30" OR LESS FOR RCP OR CP

PLAN

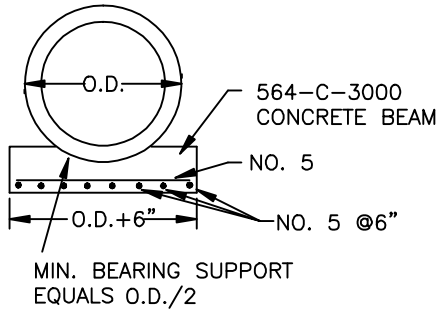

SECTION C-C

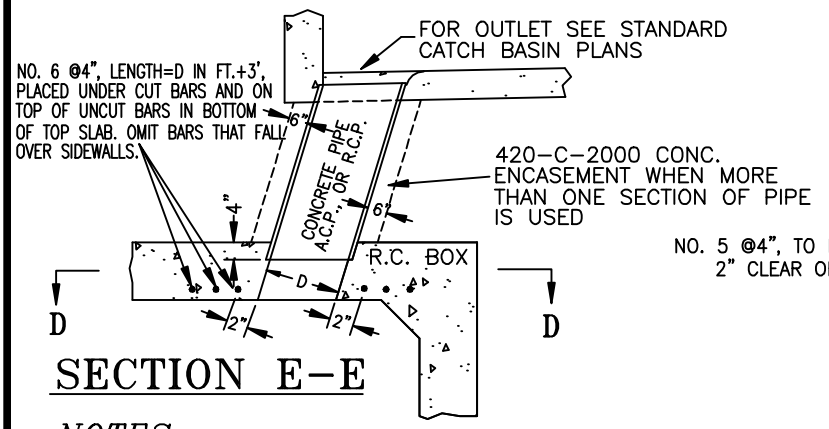

SECTION E-E

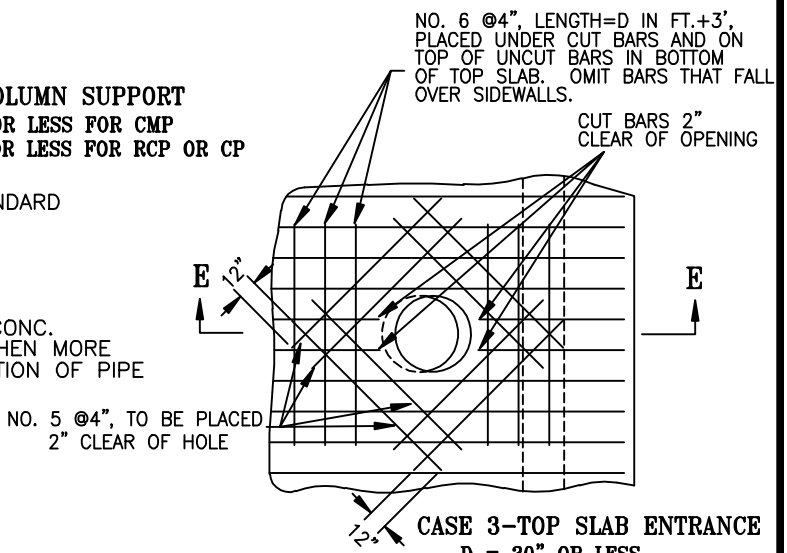

CASE 3-TOP SLAB ENTRANCE
D = 30" OR LESS

SECTION D-D

NOTES:

1. ALL CORRUGATED METAL PIPE AND FITTINGS SHALL BE GALVANIZED.
2. USE JUNCTION STRUCTURE NO. 2 WHERE SIZE OF INLET PIPE EXCEEDS DIMENSIONS GIVEN ABOVE.
3. UNLESS OTHERWISE SPECIFIED CASE 2 SUPPORT SHALL BE USED.
4. ELEV. S SHALL BE SPECIFIED ON PROJECT DRAWINGS ONLY WHERE TOP OF PIPE IS MORE THAN 12" BELOW SOFFIT OF BOX.

CITY OF CHINO HILLS		
CHRIS VOGT CITY ENGINEER	JUNCTION STRUCTURE 3	207C