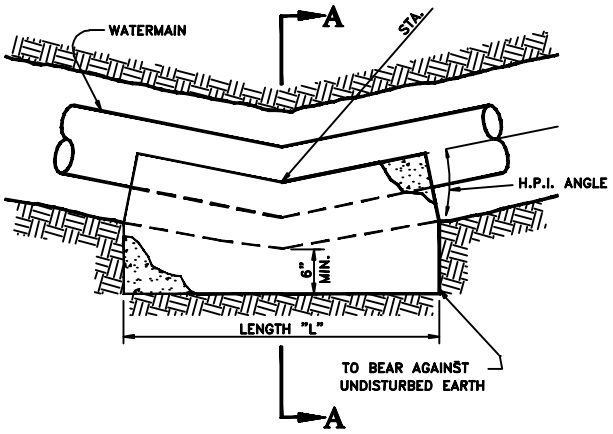

SECTIONAL PLAN

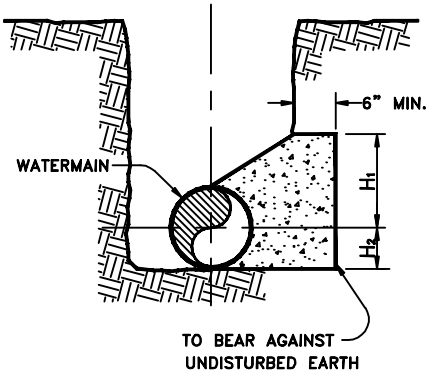

SECTION A-A

HORIZONTAL THRUST BLOCK

HORIZONTAL THRUST BLOCK				
PIPE DIA.	H_1	H_2	L	HPI ANGLE (DEGREES) UP TO CL 235
6"ø & 8"ø	9"	9"	2'-0"	5°-16°
	9"	9"	4'-0"	17°-32°
	9"	9"	6'-0"	33°-49°
	2'-0"	1'-0"	5'-0"	50°-70°
	2'-0"	1'-3"	7'-0"	71°-105°
12"ø	1'-0"	1'-0"	2'-0"	5°-11°
	1'-0"	1'-0"	4'-0"	12°-23°
	1'-0"	1'-0"	6'-0"	24°-36°
	3'-0"	1'-6"	4'-0"	37°-42°
	3'-0"	1'-6"	6'-0"	43°-66°
	3'-0"	1'-6"	8'-0"	67°-93°
16"ø	1'-6"	1'-6"	2'-0"	5°-11°
	1'-6"	1'-6"	4'-0"	12°-24°
	1'-6"	1'-6"	6'-0"	25°-36°
	3'-6"	1'-9"	6'-0"	37°-51°
	3'-6"	1'-9"	8'-0"	52°-70°
	3'-6"	1'-9"	10'-0"	71°-92°
20"ø	1'-6"	1'-6"	3'-0"	4°-11°
	1'-6"	1'-6"	6'-0"	12°-23°
	4'-0"	2'-0"	5'-0"	24°-30°
	4'-0"	2'-0"	7'-0"	31°-43°
	4'-0"	2'-0"	9'-0"	44°-57°
	4'-0"	2'-0"	11'-0"	58°-71°
	4'-0"	2'-0"	13'-0"	72°-87°
24"ø	1'-6"	1'-6"	4'-0"	3°-11°
	1'-6"	1'-6"	8'-0"	12°-22°
	1'-6"	1'-6"	10'-0"	23°-28°
	4'-0"	2'-0"	8'-0"	29°-36°
	4'-0"	2'-0"	10'-0"	37°-45°
	4'-0"	2'-0"	12'-0"	46°-55°
	4'-0"	2'-0"	14'-0"	56°-65°
	4'-0"	2'-0"	16'-0"	66°-76°
	4'-0"	2'-0"	18'-0"	77°-88°

AUGUST 2005

CITY OF CHINO HILLS			
Revised: / /	by:	Approved by:	
Revised: / /	by:		
Revised: / /	by:	CITY ENGINEER	

THRUST BLOCKS

W-3

END THRUST BLOCK & TEE THRUST BLOCK			
PIPE DIA.	H_1	H_2	LENGTH "L" UP TO CL 235
6"ø & 8"ø	2'-0"	1'-0"	4'-0"
12"ø	2'-0"	1'-0"	7'-6"
16"ø	3'-0"	1'-6"	8'-0"
20"ø	3'-6"	1'-9"	10'-0"
24"ø	4'-0"	2'-0"	12'-6"

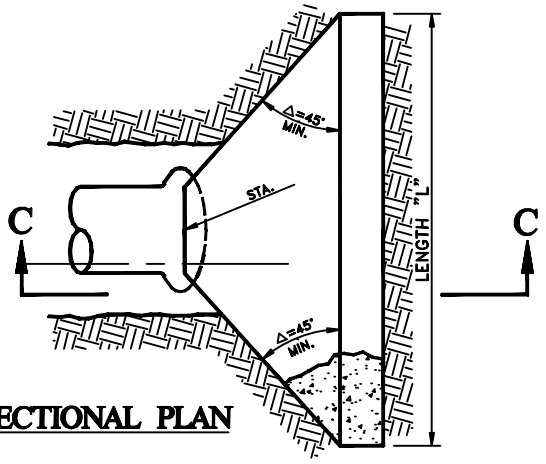

SECTIONAL PLAN

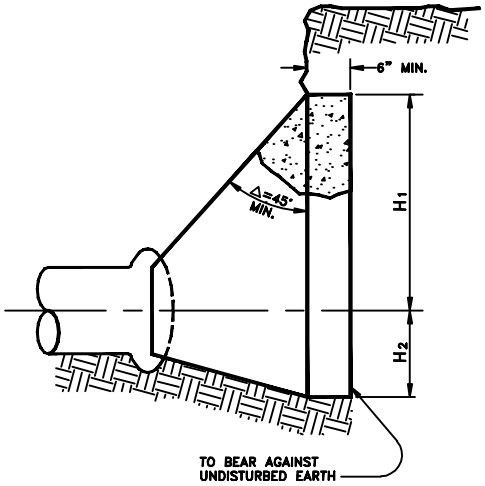

SECTION C-C

END THRUST BLOCK

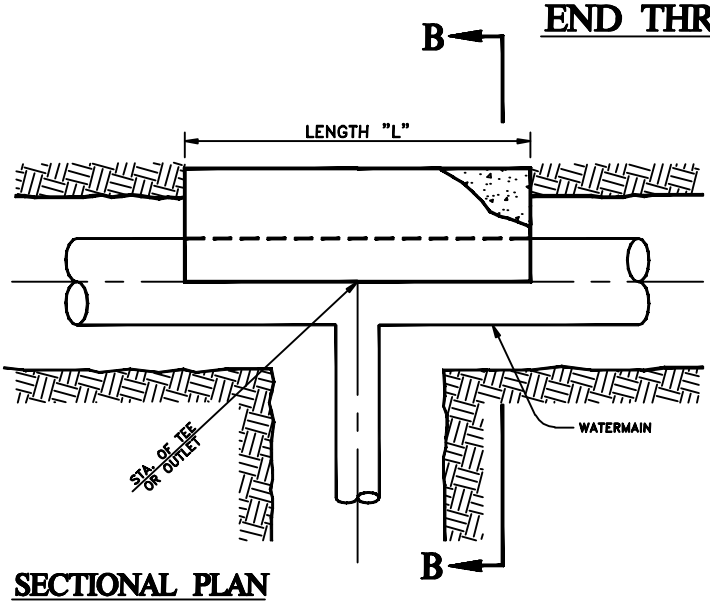

SECTIONAL PLAN

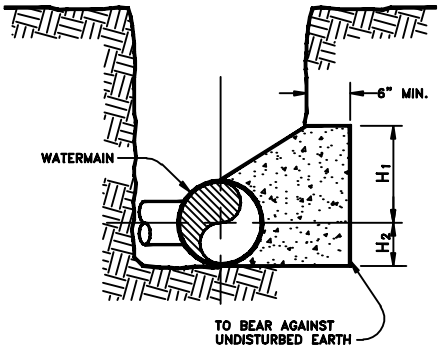

SECTION B-B

TEE OR OUTLET THRUST BLOCK

AUGUST 2005

CITY OF CHINO HILLS			
Revised: / /	by:	Approved by:	THRUST BLOCKS
Revised: / /	by:		
Revised: / /	by:	CITY ENGINEER	

W-3

VERTICAL BEARER BLOCK				
PIPE DIA.	H_2	W	L	GRADE DIFFERENCE (%) UP TO CL 235
6"ø & 8"ø	1'-0"	2'-0"	6"	4%-31%
	1'-0"	2'-0"	1'-0"	32%-74%
	1'-0"	2'-0"	1'-6"	75%-202%
12"ø	1'-0"	2'-6"	1'-0"	4%-35%
	1'-0"	2'-6"	1'-6"	36%-57%
	1'-0"	2'-6"	2'-0"	58%-88%
	1'-0"	2'-6"	2'-6"	89%-142%
16"ø	1'-6"	3'-0"	1'-0"	4%-22%
	1'-6"	3'-0"	1'-6"	23%-35%
	1'-6"	3'-0"	2'-0"	36%-50%
	1'-6"	3'-0"	3'-0"	51%-90%
	1'-6"	3'-0"	4'-0"	91%-201%
20"ø	1'-6"	3'-0"	1'-6"	4%-21%
	1'-6"	3'-0"	2'-0"	22%-29%
	1'-6"	3'-0"	2'-6"	30%-38%
	1'-6"	3'-0"	3'-0"	39%-47%
	1'-6"	3'-0"	4'-0"	48%-69%
	1'-6"	3'-0"	5'-0"	70%-102%
	1'-6"	3'-0"	6'-0"	103%-168%
24"ø	1'-6"	3'-6"	1'-6"	4%-17%
	1'-6"	3'-6"	2'-6"	18%-30%
	1'-6"	3'-6"	3'-6"	31%-44%
	1'-6"	3'-6"	4'-6"	45%-61%
	1'-6"	3'-6"	5'-6"	62%-82%
	1'-6"	3'-6"	7'-0"	83%-139%

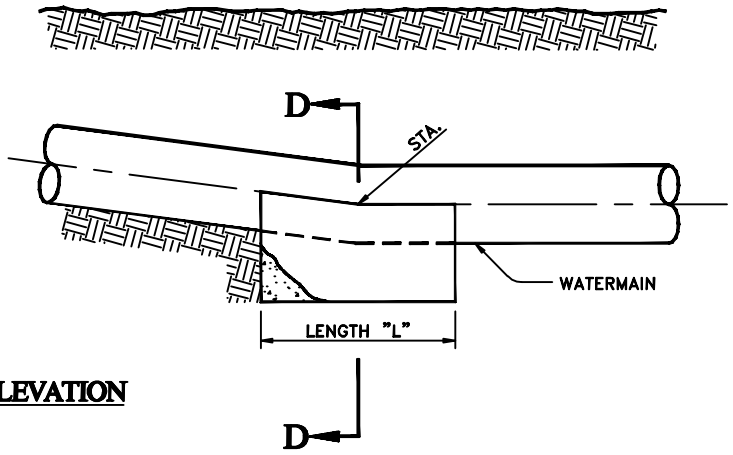

ELEVATION

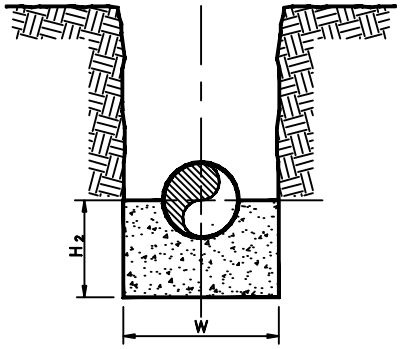

SECTION D-D

VERTICAL BEARER BLOCK

AUGUST 2005

CITY OF CHINO HILLS			
Revised: / /	by:	Approved by:	
Revised: / /	by:		
Revised: / /	by:	CITY ENGINEER	

THRUST BLOCKS

W-3

VERTICAL ANCHOR BLOCK					
PIPE DIA.	H_1	H_2	W	L	GRADE DIFFERENCE (%) UP TO CL 235
6"ø & 8"ø	2'-0"	2'-0"	2'-0"	1'-6"	4%-17%
	2'-0"	2'-0"	2'-0"	2'-6"	18%-30%
	2'-0"	2'-0"	2'-0"	3'-6"	31%-43%
	2'-0"	2'-0"	2'-0"	5'-6"	44%-81%
	2'-0"	2'-0"	2'-0"	7'-0"	82%-130%
12"ø	2'-6"	2'-6"	3'-0"	2'-0"	4%-19%
	2'-6"	2'-6"	3'-0"	3'-0"	20%-29%
	2'-6"	2'-6"	3'-0"	4'-6"	30%-46%
	2'-6"	2'-6"	3'-0"	6'-6"	47%-77%
	3'-0"	3'-0"	3'-0"	7'-0"	78%-132%
16"ø	3'-0"	3'-0"	4'-0"	2'-0"	4%-17%
	3'-0"	3'-0"	4'-0"	3'-6"	18%-30%
	3'-0"	3'-0"	4'-0"	5'-0"	31%-46%
	3'-0"	3'-0"	4'-0"	7'-0"	47%-73%
	3'-0"	3'-0"	4'-0"	10'-0"	74%-157%
20"ø	3'-0"	3'-0"	4'-6"	3'-0"	4%-18%
	3'-0"	3'-0"	4'-6"	5'-0"	19%-30%
	3'-0"	3'-0"	4'-6"	7'-0"	31%-45%
	3'-0"	3'-0"	4'-6"	10'-0"	46%-73%
	3'-0"	3'-0"	4'-6"	13'-0"	74%-120%
24"ø	3'-0"	3'-0"	5'-0"	3'-0"	4%-13%
	3'-0"	3'-0"	5'-0"	5'-0"	14%-22%
	3'-0"	3'-0"	5'-0"	7'-0"	23%-32%
	3'-0"	3'-0"	5'-0"	9'-0"	33%-43%
	3'-0"	3'-0"	5'-0"	11'-0"	44%-56%
	3'-0"	3'-0"	5'-0"	14'-0"	57%-79%
	3'-6"	3'-6"	5'-0"	15'-0"	80%-129%

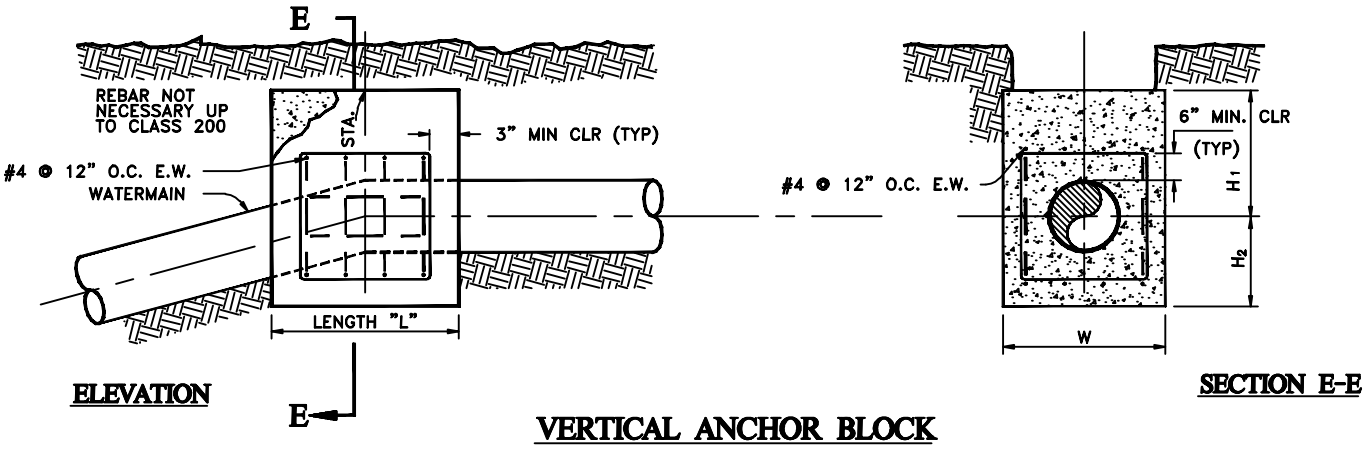

VERTICAL ANCHOR BLOCK

AUGUST 2005

CITY OF CHINO HILLS			
Revised: / /	by:	Approved by:	
Revised: / /	by:		
Revised: / /	by:	CITY ENGINEER	

THRUST BLOCKS

W-3

NOTE:

1.) ALL THRUST BLOCKS SHALL BE 500-C-2500 CONCRETE PER SEC. 2-12.04.

2.) REBAR SHALL BE INTERMEDIATE GRADE DEFORMED BARS CONFORMING TO ASTM SPEC. A-615.

3.) REBAR LAP LENGTH=18" MIN OR 36 x REBAR ø, WHICHEVER IS GREATER.

4.) REBAR NOT REQUIRED FOR PIPE UP TO CLASS 200, EXCEPT FOR SHEAR RING BLOCKS AS NOTED.

5.) HORIZONTAL THRUST BLOCKS, TEE & END BLOCKS, & SHEAR RING BLOCKS:

A.) THE ALLOWABLE LATERAL BEARING PRESSURE AGAINST UNDISTURBED EARTH (Pp) USED IN DESIGN OF BLOCKS IS 333 LBS / SQ FT /FT OF DEPTH.

B.) THE ALLOWABLE LATERAL BEARING PRESSURE WAS DETERMINED BY USING THE MINIMUM DESIGN PIPELINE COVER AS SHOWN IN THE THRUST BLOCK TABLES.

C.) THE TOTAL RESULTANT THRUST FOR HORIZONTAL ANGLES WAS DETERMINED USING THE RELATIONSHIP

$HT=2P\ PI/4\ D^2\ SIN\ \triangle/2$

WHERE HT= TOTAL HORIZONTAL THRUST, LBS.
D= INSIDE DIAMETER, IN.
P= INTERNAL PRESSURE, PSI.
$\triangle$= HPI, DEGREES.

6.) VERTICAL BEARER BLOCK & VERTICAL ANCHOR BLOCK:

A.) THE ALLOWABLE FOUNDATION PRESSURE AGAINST UNDISTURBED EARTH (Pp) USED FOR DETERMINING THE REQUIRED BEARER BLOCK IS 3000 LBS/SQ FT.

B.) THE TOTAL RESULTANT THRUST FOR VERTICAL ANGLES WAS APPROXIMATED USING THE RELATIONSHIP

$VT=P\ PI/4\ D^2\ SIN(\triangle=TAN^{-1}\ g/100)$.

WHERE VT= TOTAL VERTICAL THRUST, LBS.
D= INSIDE PIPE DIAMETER, IN.
P= INTERNAL PRESSURE, PSI.
$\triangle$= VPI, DEGREES.
g= GRADE DIFFERENCE, (%).

AUGUST 2005

CITY OF CHINO HILLS			
Revised: / /	by:	Approved by:	
Revised: / /	by:		
Revised: / /	by:	CITY ENGINEER	

THRUST BLOCKS

W-3